WARNING: PROPRIETARY AND CONFIDENTIAL

THE INFORMATION CONTAINED IN THIS DRAWING IS THE SOLE PROPERTY OF TARAL PLASTICS. ANY UNAUTHORIZED USE, TRANSMISSION, OR REPRODUCTION IN PART OR AS A WHOLE WITHOUT THE WRITTEN PERMISSION OF TARAL PLASTICS IS STRICTLY PROHIBITED.

taral
we mold to you

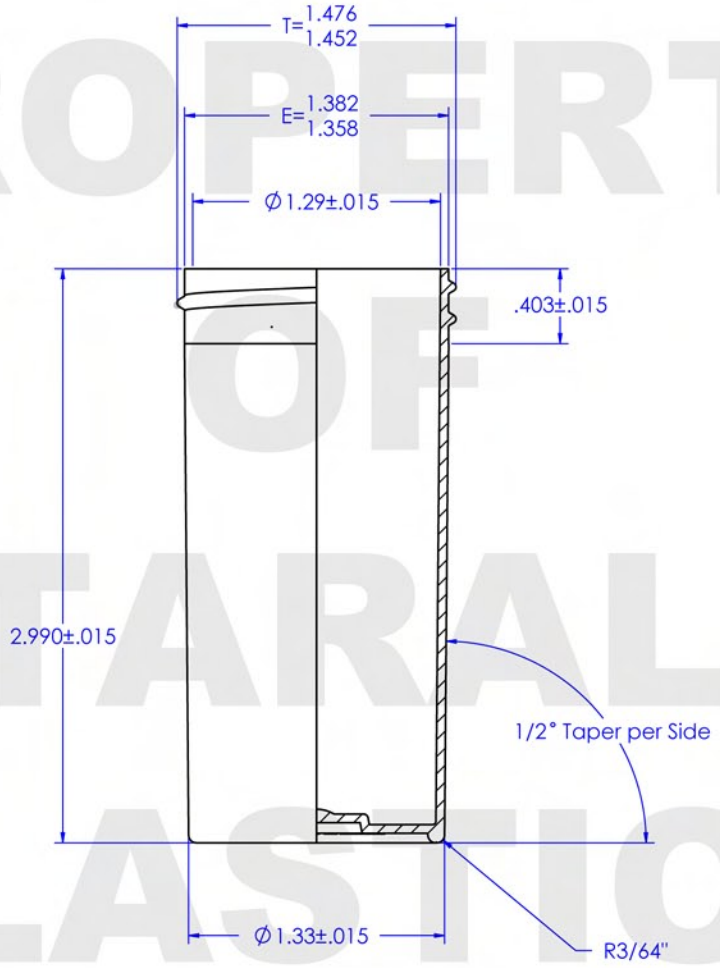

PROPERTY OF TARAL PLASTICS

DECORATION AREA

WRAP: 4.0 inch

HEIGHT: 2.2 inch

DRAFT: 1/2° per Side

	NAME	DATE
DRAWN	W. OTT	05/23/2012
MATERIAL	PP	
APPROX WEIGHT:	9.8 grams	
APPROX OVERFLOW:	59.5 ml	
THREAD:	"L" STYLE, 6 TPI PITCH	
COMMENTS:		

5 PP

725 Zwissig Way
Union City, CA 94587
Phone: 866-93-TARAL
www.TaralPlastics.com

PART DESCRIPTION:

2oz 38mm-400
Regular Wall Jar

SIZE	PART CODE	REV.
A	2-38-PP	-

SCALE:1:1 | DO NOT SCALE DRAWING | SHEET 1 OF 1

TOLERANCE	
DIM.	TOL.
.00	.015
.000	.010

REVISIONS

REV.	DATE	DESCRIPTION