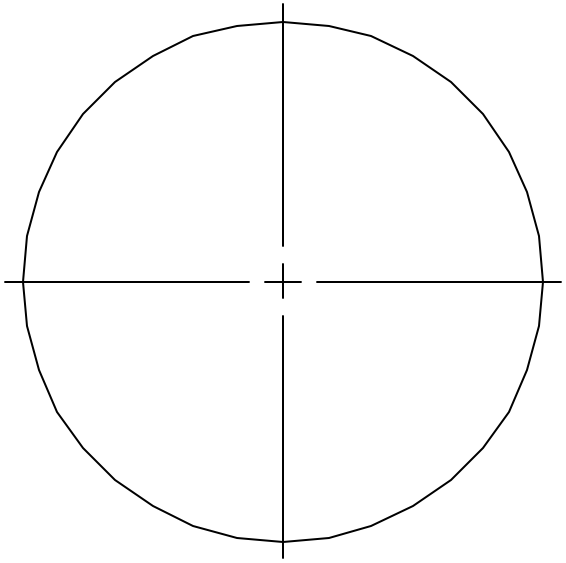

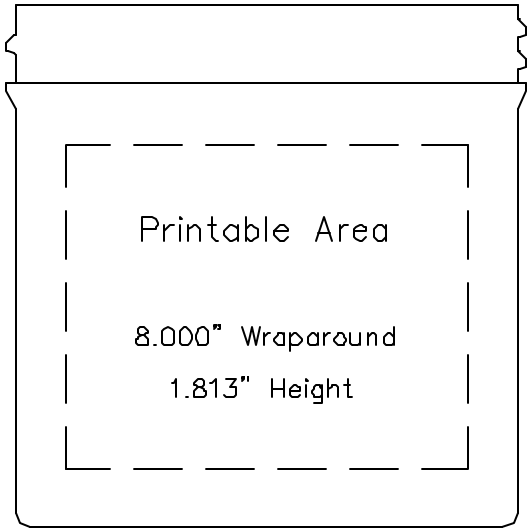

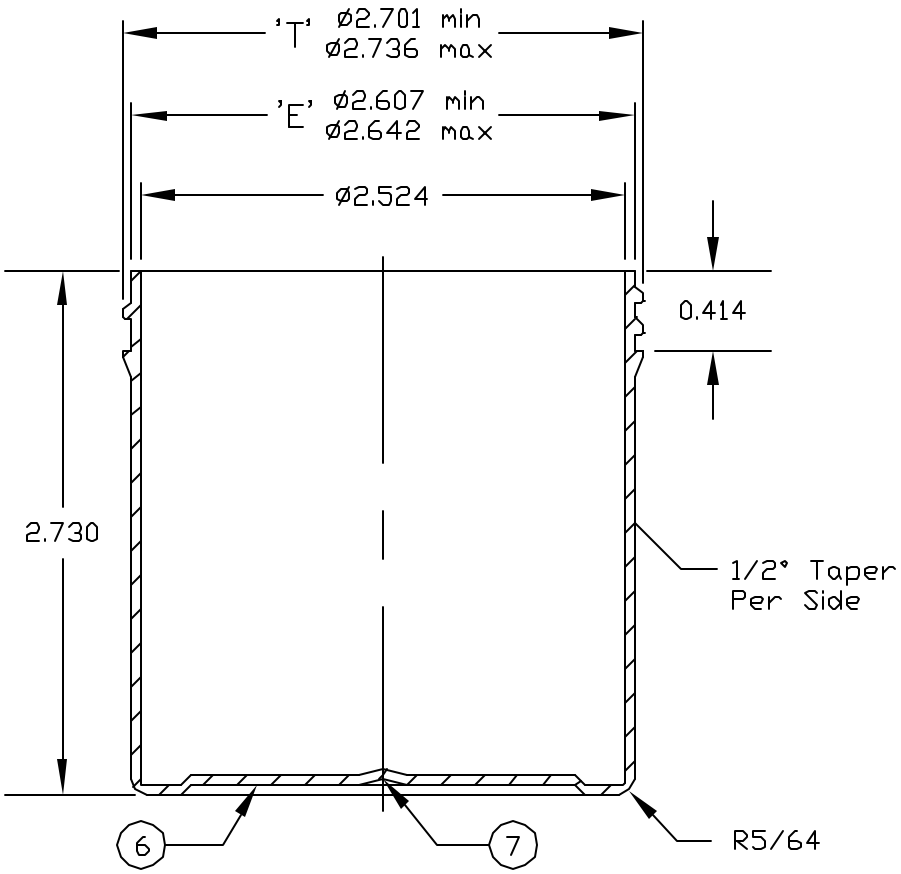

WARNING

This drawing is the property of Delta Plastics, Inc. Any unauthorized use, reproduction, or transmission of this document without the written consent of Delta Plastics, Inc. is strictly prohibited.

1. MATERIAL: POLYPROPYLENE
2. 6 THREADS/INCH, "M" STYLE
3. OVERFLOW CAPACITY: APPROX. 213cc
4. ALL FILLETS & RADII TO BE: 0.010" UNLESS OTHERWISE SPECIFIED
5. DRAFT TO BE: 1/2° UNLESS OTHERWISE SPECIFIED
6. CAVITY NUMBER
7. GATE LOCATION: CENTER
8. WEIGHT: APPROX. 20.4 GRAMS
9. DELTA PART #: 1250

Delta Plastics, Inc.

CORPORATE OFFICE
106 Delta Place
Hot Springs, AR 71913
(501) 760-3000
Fax: (501) 760-3005

TECH CENTER
15130 Northam Street
La Mirada, CA 90638
(714) 670-6400
Fax: (714) 670-7500

TITLE:

6 oz. (70mm) SINGLE WALL POLYPROPYLENE JAR

TOLERANCE				
DIM.	TOL.			
.00	.015	3	Taper(JBF)	2/18/03
.000	.010	2	print area(SPM)	9/18/02
DRAWN: JBF	DATE: 2/18/03	1	print area(JSD)	4/15/02
CHECKED:	DATE:	0	orig dwg(AHV)	12/8/00
SCALE: 1:1	DWG.# 1250	REV.	DESC. OF CHANGE	DATE